Digital Logic Families

1. Bipolar Logic Family
    a. Resistor-Transistor Logic (RTL)
2. MOS Logic Family
    a. Resistor-Transistor Logic (RTL)
    b. NMOS Enhancement Load Logic Family
    c. CMOS Logic Family

1. Bipolar Logic Family

a. Resistor-Transistor Logic (RTL)

- 3ayzeen nemla el table da 3ashan ne decide whether the bipolar logic family is good or bad.

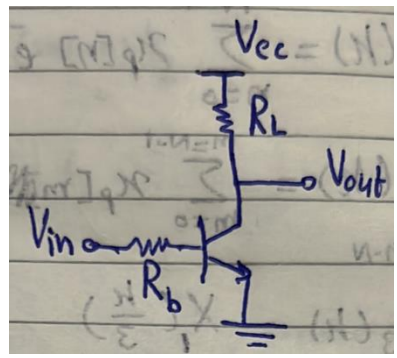

$Logic\ Input$	V_{in}	V_{out}	Q	$Current$
$'0'$				
$'1'$				

3ashan neda5al logic '0' w logic '1' handa5al voltage kam? Akeed $0\ V$ w V_{cc}.

$Logic\ Input$	V_{in}	V_{out}	Q	$Current$
$'0'$	$\mathbf{0\ V}$			
$'1'$	$\boldsymbol{V_{cc}}$			

Logic '0' Case:

3ayzeen ne3raf el region of operation (Q) bta3t el BJT. Da5el 3al base 0 V yeb2a akeed off. Sa3et-ha V_{out} hateb2a bkam? Be V_{cc}, which is the perfect logic '1'.

$Logic\ Input$	V_{in}	V_{out}	Q	$Current$
$'0'$	$0\ V$	$\boldsymbol{V_{cc}}$	**Cut-off**	
$'1'$	V_{cc}			

El current 2ad eh? open circuit yeb2a zero.

$Logic\ Input$	V_{in}	V_{out}	Q	$Current$
$'0'$	$0\ V$	V_{cc}	Cut-off	$\mathbf{0}$
$'1'$	V_{cc}			

Logic '1' Case:

3ayzeen ne3raf el region of operation (Q) bta3t el BJT. Da5el 3leeh V_{cc} fa howa akeed on. Tyb ya tara active wala saturation? De b2a enta el te7adedha ka designer, enta el te design el area bta3t el BJT wel resistor el fel circuit such that enak te5aly el transistor fel region of operation el enta 3ayezha. Tab e7na 3ayzeno yeb2a eh? e7na 3ayzeen el output yeb2a logic '0', y3ny voltage olayel, yeb2a ana 3ayez V_{out} a2al ma yomken. Hal yenfa3 teb2a be zero? La2 la2en a2al voltage 3la el BJT beyeb2a fel saturation region w beyeb2a be $V_{CE,sat}$. Yeb2a keda a2al value le V_{out} heya $V_{CE,sat}$ wel region of operation heya saturation. Tab wel current? Hayeb2a be I_{sat}.

$Logic\ Input$	V_{in}	V_{out}	Q	$Current$
$'0'$	$0\ V$	V_{cc}	Cut-off	0
$'1'$	V_{cc}	$\boldsymbol{V_{CE,sat}}$	**Saturation**	$\boldsymbol{I_{sat}}$

3ayzeen bs n3araf 2 quantities:

1) V_{OL}: The best possible logic '0' voltage that a family can output.
2) V_{OH}: The best possible logic '1' voltage that a family can output.

Tab3an hayeb2a dayman nefsena en V_{OL} teb2a be $0\ V$ w V_{OH} teb2a be V_{DD}. Tab hena V_{OL} & V_{OH} equal kam?

$$V_{OL} = V_{CE,sat}$$

$$V_{OH} = V_{cc}$$

Yeb2a eh el disadvantages beta3t el BJT family el wad7a fel table el faat?

1. V_{OL} is not $0\ V$ but $V_{CE,sat}$.
2. In case of logic '1' input, there is a static current I_{sat} flowing.

Actually, fi ghalta e7na 3amlenha fel truth table keda. Eh heya? Enena ektashafna en el logic '0' output howa mesh $0\ V$ la2 howa $V_{CE,sat}$. Tab eh el ghalat f keda? El ghalat f keda enena fel case beta3t logic '0' input e3tabarna en el voltage be $0\ V$, fa da ghalat la2en e7na bene3teber en el hayedeny el input beta3y howa gate zayee bzbt, wana lesa ba2ol en ana a7san logic '0' hatala3o howa $V_{CE,sat}$, fa menen haygely el $0\ V$ da? W bel taly lazem ne modify el table as follows:

$Logic\ Input$	V_{in}	V_{out}	Q	$Current$
$'0'$	$\boldsymbol{V_{CE,sat}}$	V_{cc}	Cut-off	0
$'1'$	V_{cc}	$V_{CE,sat}$	Saturation	I_{sat}

Mafeesh 7aga tanya hatetghayar fel table? As long as $V_{CE,sat}$ is less than $V_{BE,ON}(\approx 0.7V)$ (w da 7a2e2y f3ln), the BJT will remain in cut-off and hence nothing will change. Fa el e7na dayman hane3melo fi ay family enena nebda2 be en el logic '0' be $0\ V$, w nshoof haytala3lena logic '1' voltage bkam, el hayetla3 yeb2a howa el V_{OH}, na5od el V_{OH} da neda5alo tany ka input w el yetla3 howa V_{OL}, walahy tele3 $0\ V$ 5eer w baraka, tele3 7aga tanya nerga3 n3adel el row beta3 el logic '0' input fel table zy ma 3amalna hena keda.

Now let us cascade some BJTs after that BJT (called fanout):

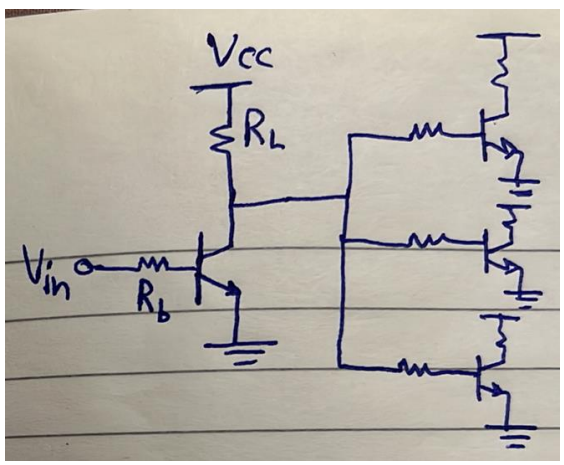

El table hayetghayar ezay fel case de?

Fel case beta3t logic '1' input mafeesh 7aga hatetghayar. Fel case beta3t logic '0' input, fa el BJT hayeb2a open-circuit bardo tamam. However, hal el current el hayeb2a mashy hayeb2a be zero? La2, la2en el BJTs el tanya betes7ab base current, w bel taly el voltage 3and el output beta3 awel BJT (called driver) mesh hayeb2a V_{cc}, w enama hayeb2a $V_{cc} - nI_b * R_L$. Thus:

$Logic\ Input$	V_{in}	V_{out}	Q	$Current$
$'0'$	$V_{CE,sat}$	$V_{cc} - nI_b * R_L$	Cut-off	0
$'1'$	V_{cc}	$V_{CE,sat}$	Saturation	I_{sat}

Yeb2a keda el disadvantages beta3t el BJT logic family el mesh hat5alena nesta5demha heya:

1. The logic '0' output is not a perfect logic '0' but $V_{CE,sat}$.

2. In case of logic ‘1’ input, there is a static current I_{sat} flowing.
3. In case of logic ‘0’ input, the output depends on the fanout (degrades as the fanout increases).

Another problem heya en el BJT fabrication beyeb2a as shown below:

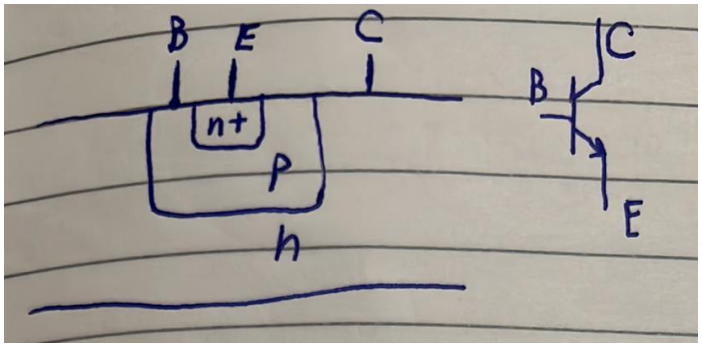

Eh el moshkela f keda? El moshkela en el substrate heya el collector terminal, fa lw gena ne fabricate 2 BJTs gamb b3d hayeb2a lehom common collector as shown below, fi 7een eny makontesh 3ayez awasal el collectors beto3hom wala 7aga.

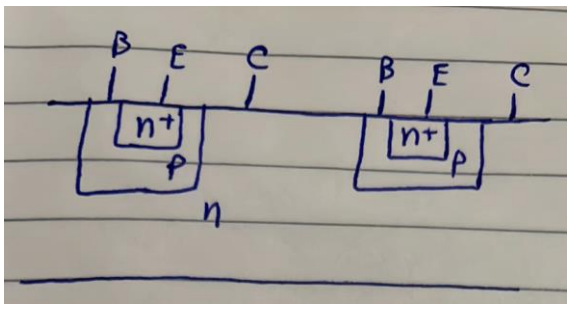

3ashan ne7el el moshkela de ben7ot p-type fel nos mabenhom w nwasalha bel ground, b7ees keda yeb2a el 2 PN junctions yemen w shmaal reverse biased as shown below.

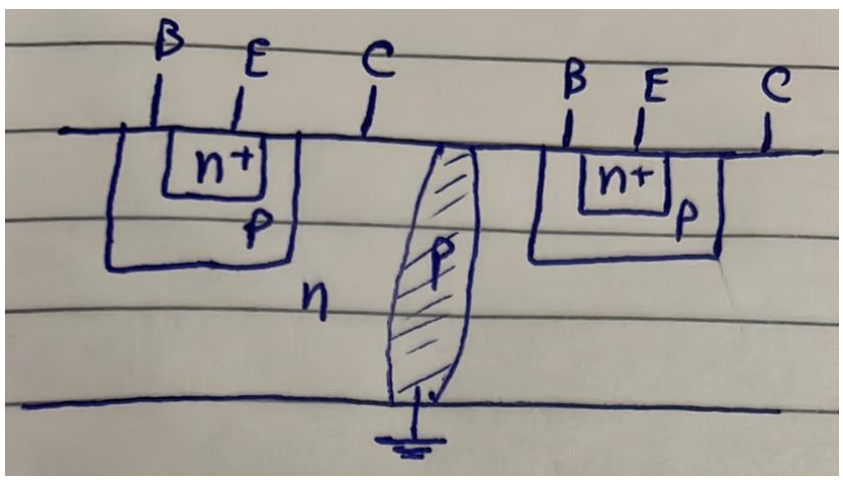

Fa tab3an da yo3tabar waste of area en mabeen kol 2 BJTs aroo7 7atet p-type.

2. MOS Logic Family

a. Resistor-Transistor Logic (RTL)

$Logic\ Input$	V_{in}	V_{out}	M	$Current$
$'0'$	$0\ V$			
$'1'$	V_{DD}			

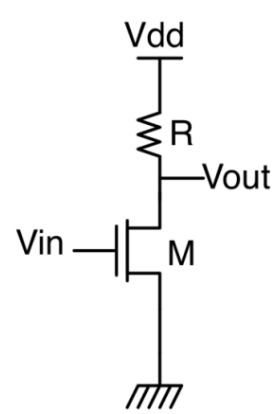

Logic '0' Case:

Logic '0' y3ny el MOSFET cut-off, w bel taly kol 7aga et7adedet:

$Logic\ Input$	V_{in}	V_{out}	M	$Current$
$'0'$	$0\ V$	$\boldsymbol{V_{DD}}$	$\boldsymbol{Cut-off}$	$\mathbf{0}$
$'1'$	V_{DD}			

Logic '1' Case:

$V_{in} = V_{DD}$ yeb2a mabda2eyan el transistor on. Sat wala triode? As2al nafsy ana 3ayzo eh? walahy ana nefsy V_{out} teb2a be $0\ V$, y3ny 3ayez el voltage drop 3al transistor Asghar ma yomken, y3ny 3ayez el resistance beta3to teb2a soghayara gedan. Anhy region beteb2a fiha resistance el MOSFET soghayara? El deep triode (ohmic) region. Thus, ha assume eno fel ohmic region w ab2a a verify this assumption later.

$Logic\ Input$	V_{in}	V_{out}	M	$Current$
$'0'$	$0\ V$	V_{DD}	$Cut-off$	0
$'1'$	V_{DD}		$\boldsymbol{ohmic}$	

Hane7seb V_{OL} w I ezay? Dayman et3awed enena hane3mel KCL at the output:

$$I_R = I_{MOSFET}$$

$$\frac{V_{DD} - V_{OL}}{R} = K\left[(V_{DD} - V_{TH})V_{OL} - \frac{V_{OL}^2}{2}\right]$$

Then han solve this quadratic equation, hayetla3lena 2 solutions, bs solution wa7ed bs fihom howa el ye5aly el MOSFET fel ohmic region (w keda teb2a bel mara verified your assumption). Fadel ne7seb el current, simply hana5od V_{OL} el 7asabnaha de w n7otaha fi equation I_R aw I_{MOSFET} neb2a 7asabna el current.

$Logic\ Input$	V_{in}	V_{out}	M	$Current$
$'0'$	$0\ V$	V_{DD}	$Cut-off$	0
$'1'$	V_{DD}	V_{OL}	$ohmic$	I_{ohmic}

Again, V_{OL} matel3etsh $0\ V$ zy ma kona moftaredeen. Yeb2a lazem ne modify el table in case of logic '0' input. Fi ay 7aga tanya hatetghayar? As long as V_{OL} is smaller than V_{TH} (w heya f3ln hateb2a smaller), mafeesh 7aga hatetghayar.

$Logic\ Input$	V_{in}	V_{out}	M	$Current$
$'0'$	V_{OL}	V_{DD}	$Cut-off$	0
$'1'$	V_{DD}	V_{OL}	$ohmic$	I_{ohmic}

Disadvantages:

1) V_{OL} is not $0\ V$.
2) In case of logic '1' input, there is a static current I_{ohmic} flowing.

Yeb2a e7na moshkeletna ma3 el family de heya el V_{OL}, nefsena nesagharha 3la 2ad ma ne2dar. 3ashan ne2alel V_{OL}, el mafrood n3ml eh fi $\frac{W}{L}$ w R?

3ashan negaweb el so2al da, me7tag tefakar fel circuit el foo2 enaha voltage divider mabeen el R wel R_{MOSFET}, w en el voltage el 3la el MOSFET howa V_{OL} de. Enta 3ayez te2alel V_{OL}, yeb2a akeed hankabar R b7ees nekabar el voltage drop 3leeha w bel taly V_{OL} te2el. Tyb $\frac{W}{L}$? We know that

$$R_{MOSFET} \propto \frac{1}{I} \propto \frac{1}{\frac{W}{L}}$$

W bema enena 3ayzeen R_{MOSFET} tesghar, yeb2a 3ayzeen $\frac{W}{L}$ tezeed. Thus, to decrease V_{OL}:

1) $R \uparrow$
2) $\frac{W}{L} \uparrow$

However, we know that resistors are hard to integrate on chip, so we move forward to the next logic family.

b. NMOS Enhancement Load Logic Family

$Logic\ Input$	V_{in}	V_{out}	M_D	M_L	$Current$
$'0'$					
$'1'$					

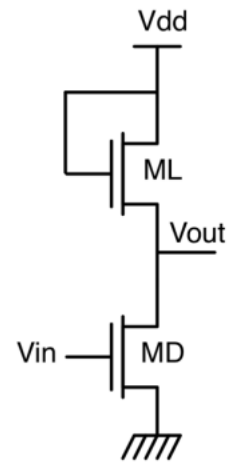

Logic Input '0' Case:

$$V_{in} = 0\ V$$

$$M_D \rightarrow off, I = 0$$

$$M_L \rightarrow Sat\ (diode - connected)$$

Hane7seb V_{out} ezay? Again, KCL at the output:

$$I_{M_L}|_{sat} = I_{M_D}|_{off}$$

$$\frac{K_L}{2}\left(V_{DD} - V_{OH} - V_{TH_L}\right)^2 = 0 \rightarrow \boldsymbol{V_{OH} = V_{DD} - V_{TH_L}}$$

Notice that V_{TH_L} is large due to body effect.

$Logic\ Input$	V_{in}	V_{out}	M_D	M_L	$Current$
$'0'$	$\boldsymbol{0\ V}$	$\boldsymbol{V_{DD} - V_{TH_L}}$	**Off**	**Sat**	**0**
$'1'$					

Logic Input '1' Case:

$$V_{in} = V_{DD} - V_{TH_L}$$

$$M_L \rightarrow Sat.$$

$$M_D \rightarrow ?$$

Again, by design, ana 3ayez V_{out} delwa2ty yeb2a low voltage 3ashan da inverter, w bel taly 3ayez M_D yeb2a el voltage drop 3leeh olayel, yeb2a 3ayzo yeb2a fel ohmic region. Fa han assume eno ohmic w neb2a nerga3 ne verify fel a5er.

Hane7seb V_{OL} w I ezay? Again, KCL at the output:

$$I_D|_{ohmic} = I_L|_{sat}$$

$$K_D\left[\left(VDD - V_{TH_L} - V_{TH_D}\right)V_{OL} - \frac{V_{OL}^2}{2}\right] = \frac{K_L}{2}\left(V_{DD} - V_{OL} - V_{TH_L}\right)^2$$

$$Solve\ for\ V_{OL}\ and\ verify\ your\ assumption\ (i.e.\ V_{OL} < V_{DD} - V_{TH_L} - V_{TH_D})$$

$$get\ I$$

$Logic\ Input$	V_{in}	V_{out}	M_D	M_L	$Current$
$'0'$	$\boldsymbol{V_{OL}}$	$V_{DD} - V_{TH_L}$	Off	Sat	0
$'1'$	$\boldsymbol{V_{DD} - V_{TH_L}}$	$\boldsymbol{V_{OL}}$	**Ohmic**	**Sat**	$\boldsymbol{I}$

Disadvantages of this logic family:

1) $V_{OH} = V_{DD} - V_{TH_L}$ not V_{DD}.
2) V_{OL} is not $0\ V$.
3) In case of logic '1' input, there is a static current flowing.

What is the power dissipation in this inverter?

$$Power\ Dissipation =$$

$$\frac{Power\ Dissipation\ In\ case\ of\ Logic\ '1' + Power\ Dissipation\ In\ case\ of\ Logic\ '0'}{2} = \frac{V_{DD} * I_{OL} + 0}{2}$$

$$= \frac{V_{DD} * I_{OL}}{2}$$

NOR Gate

A	B	M_1	M_2	M_L	I_L	V_{out}
0	0					
0	1					
1	0					
1	1					

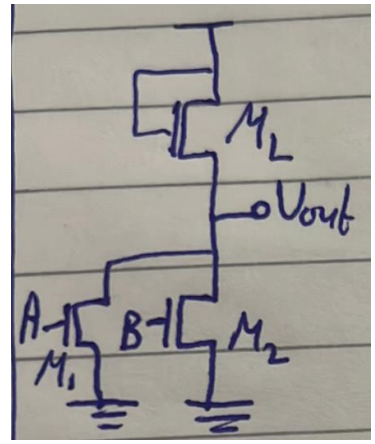

'0' '0': easy (hane3mel KCL at the output kal3ada, ma3andenash equation gheer de).

A	B	M_1	M_2	M_L	I_L	V_{out}
0	0	Cut-off	Cut-off	Sat.	0	$V_{DD} - V_{TH_L}$
0	1					
1	0					
1	1					

'0' '1': M1 cut-off 3ady, M2? By design, e7na 3ayzeen yeb2a el output low voltage, w bel taly lazem M2 yeb2a ohmic.

Current and Vout? Again, KCL at the output:

$$I_L = I_{M2}$$

$$\frac{K_L}{2}\left(V_{DD} - V_{OL1} - V_{TH_L}\right)^2 = K_{M2}\left[\left(VDD - V_{TH_L} - V_{TH_{M2}}\right)V_{OL1} - \frac{V_{OL1}^2}{2}\right]$$

A	B	M_1	M_2	M_L	I_L	V_{out}
0	0	Cut-off	Cut-off	Sat.	0	$V_{DD} - V_{TH_L}$
0	1	Cut-off	Ohmic	Sat.	I_{OL1}	V_{OL1}
1	0					
1	1					

‘1’ ‘0’: Nafs el case el fatet, M1 w M2 bs badelo:

$$I_L = I_{M1}$$

$$\frac{K_L}{2}\left(V_{DD} - V_{OL2} - V_{TH_L}\right)^2 = K_{M1}\left[\left(VDD - V_{TH_L} - V_{TH_{M1}}\right)V_{OL2} - \frac{V_{OL2}^2}{2}\right]$$

A	B	M_1	M_2	M_L	I_L	V_{out}
0	0	Cut-off	Cut-off	Sat.	0	$V_{DD} - V_{TH_L}$
0	1	Cut-off	Ohmic	Sat.	I_{OL1}	V_{OL1}
1	0	Ohmic	Cut-off	Sat.	I_{OL2}	V_{OL2}
1	1					

Note before ‘1’ ‘1’ case:

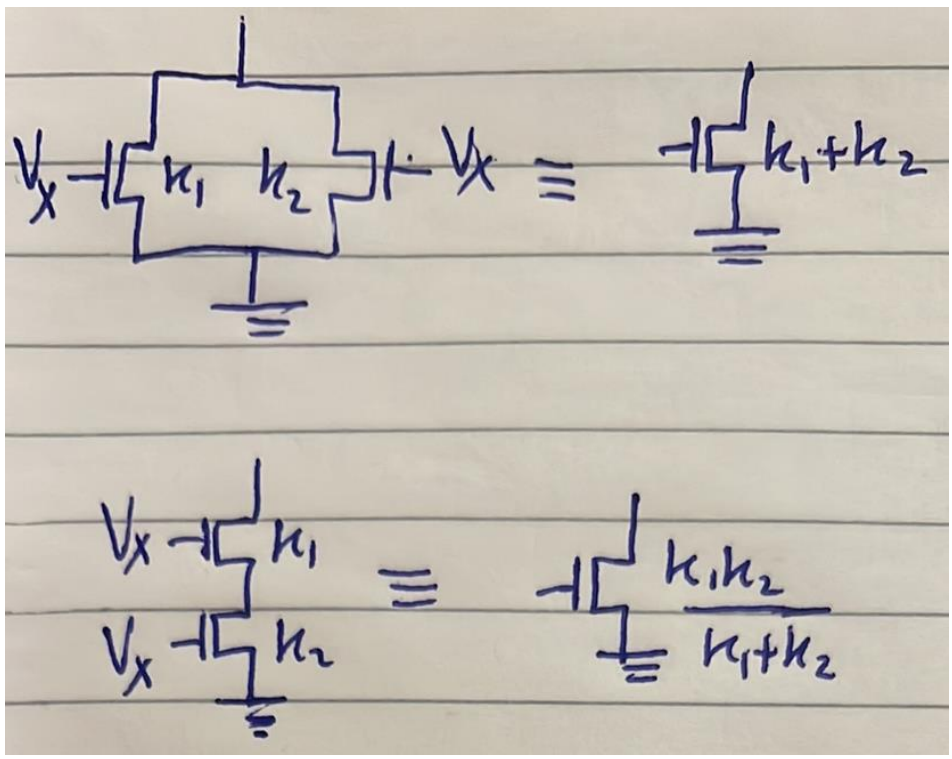

Notice eno shart ykoon el 2 transistors da5el 3leehom nafs el voltage.

‘1’ ‘1’:

By design, M1 and M2 fel ohmic 3ady. V_{out} and I_L? KCL at the output, bs abl ma te3mel keda esta5dem el rule bta3t 2 parallel transistors el lesa 2ayleen 3leeha:

$$I_L = I_{M,parallel}$$

$$\frac{K_L}{2}\left(V_{DD} - V_{OL3} - V_{TH_L}\right)^2 = K_{M,parallel}\left[\left(VDD - V_{TH_L} - V_{TH_{M1,2}}\right)V_{OL3} - \frac{V_{OL3}^2}{2}\right]$$

$$K_{M,parallel} = K_1 + K_2$$

A	B	M_1	M_2	M_L	I_L	V_{out}
0	0	Cut-off	Cut-off	Sat.	0	$V_{DD} - V_{TH_L}$
0	1	Cut-off	Ohmic	Sat.	I_{OL1}	V_{OL1}
1	0	Ohmic	Cut-off	Sat.	I_{OL2}	V_{OL2}
1	1	Ohmic	Ohmic	Sat.	I_{OL3}	V_{OL3}

Power Dissipation?

$$P = \frac{(0 + I_{OL1} + I_{OL2} + I_{OL3})}{4} * V_{DD}$$

What is the relation between V_{OL1}, V_{OL2} and V_{OL3}?

$$V_{OL3} < V_{OL1}, V_{OL2}$$

Again, fakar fiha ka voltage divider. Fel case beta3t '1' w '1', bema en M1 & M2 became on, fa ka2en ba2a fih 2 resistors in parallel, w bel taly el value beta3et-hom 2alet, w bel taly el voltage drop 3leehom 2al, el howa V_{OL3}.

NAND Gate

A	B	M_1	M_2	M_L	I_L	V_{out}
0	0	Cut-off	Cut-off	Sat.	0	$V_{DD} - V_{TH_L}$
0	1	Cut-off	Ohmic	Sat.	0	$V_{DD} - V_{TH_L}$
1	0	Ohmic	Cut-off	Sat.	0	$V_{DD} - V_{TH_L}$
1	1	Ohmic	Ohmic	Sat.	I_{OL}	V_{OL}

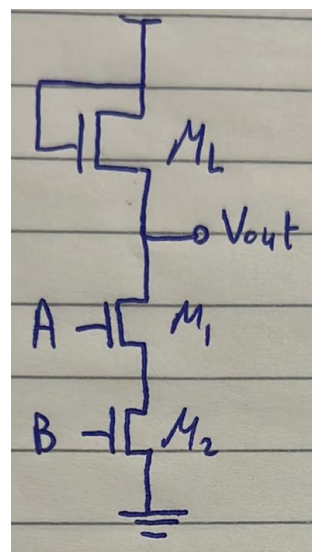

$$I_L = I_{M,series} = I_{OL}$$

$$\frac{K_L}{2}\left(V_{DD} - V_{OL} - V_{TH_L}\right)^2 = K_{M,series}\left[\left(VDD - V_{TH_L} - V_{TH_{M1,2}}\right)V_{OL} - \frac{V_{OL}^2}{2}\right]$$

$$K_{M,series} = \frac{K_1 K_2}{K_1 + K_2}$$

Determine the logic expression of the shown circuit:

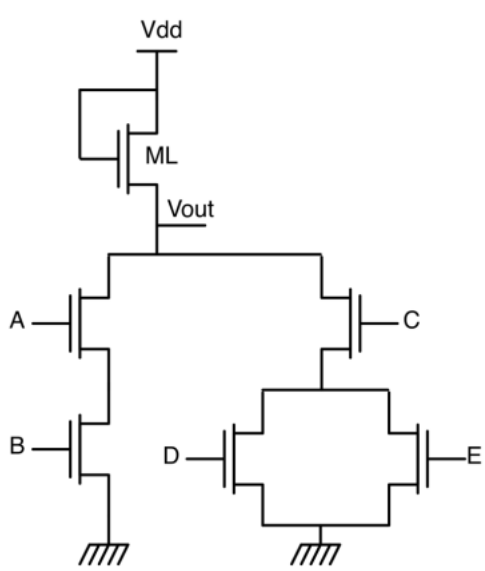

Answer:

$$\bar{F} = AB + C(D + E) \rightarrow F = \overline{(AB + C(D + E))}$$

Draw the circuit that represents the following expression:

$$F = \bar{A}B + CD\bar{E}$$

• We always implement the inverting logic: $\bar{F} = \overline{(\bar{A}B + CD\bar{E})}$

- Solution 1: implement the obtained expression as it is by using an inverter at the output.

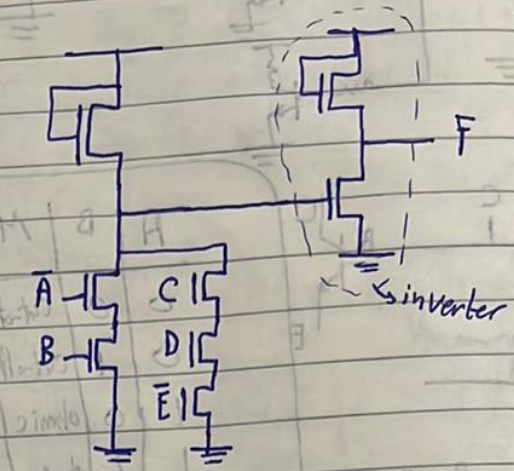

- Solution 2: further simplify the expression:

$$\bar{F} = \overline{(\bar{A}B)} \cdot \overline{(CD\bar{E})} = (A + \bar{B}) \cdot (\bar{C} + \bar{D} + E)$$

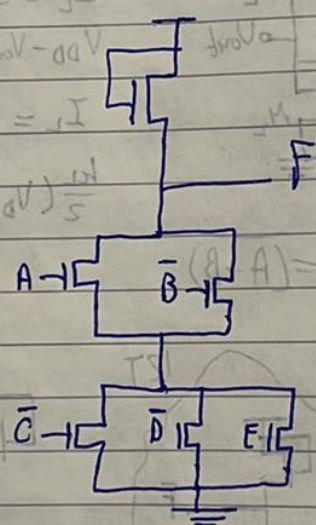

Which is better?

	Solution 1		Solution 2	
	Main	Inverters	Main	Inverters
Number of transistors	6	6	6	6

So both have same area. So how to decide? ⟹ Delay! (in the next lectures)

Back to this circuit again:

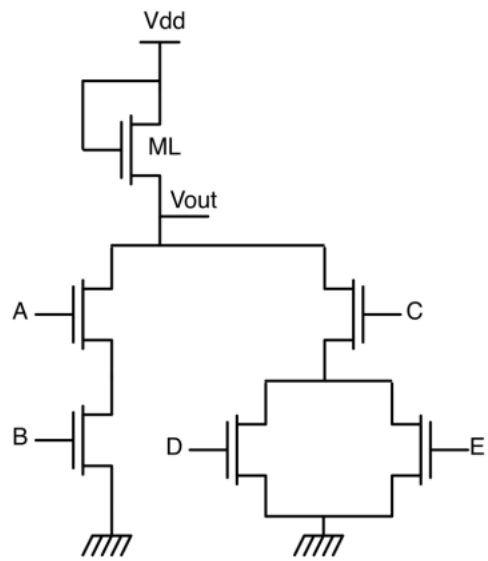

What is the output in this case:

A	B	C	D	E
1	1	0	1	1

Answer:

Mabda2eyan howa akeed logic '0'. Bs kam bzbt? Terza3 el equation el gamela:

$$\frac{K_L}{2}\left(V_{DD} - V_{OL} - V_{TH_L}\right)^2 = K_{M,series}\left[\left(VDD - V_{TH_L} - V_{TH_{M_{A,B}}}\right)V_{OL} - \frac{V_{OL}^2}{2}\right]$$

$$K_{M,series} = \frac{K_A K_B}{K_A + K_B}$$

What is the output in this case:

A	B	C	D	E
1	0	1	1	1

Answer:

Mabda2eyan howa akeed logic '0'. Bs kam bzbt? Terza3 el equation el gamela:

$$\frac{K_L}{2}\left(V_{DD} - V_{OL} - V_{TH_L}\right)^2 = K_{equivalent}\left[\left(VDD - V_{TH_L} - V_{TH_{M_{C,D,E}}}\right)V_{OL} - \frac{V_{OL}^2}{2}\right]$$

$$K_{equivalent} = \frac{K_C(K_D + K_E)}{K_C + K_D + K_E}$$

What is the output in this case:

A	B	C	D	E
0	1	0	1	1

Answer:

Logic '1', which is $V_{DD} - V_{TH_L}$

What is the input that results in the best possible V_{OL}? And what is the value of this V_{OL}?

Answer:

When all inputs are high (Again, fakar fel transistors ka resistors, kol ma el parallel branches ketro kol ma el value 2alet and hence el voltage el 3leehom, el howa V_{OL}, hay2el).

$$\frac{K_L}{2}\left(V_{DD} - V_{OL} - V_{TH_L}\right)^2 = K_{equivalent}\left[\left(VDD - V_{TH_L} - V_{TH}\right)V_{OL} - \frac{V_{OL}^2}{2}\right]$$

$$K_{equivalent} = \frac{K_A K_B}{K_A + K_B} + \frac{K_C(K_D + K_E)}{K_C + K_D + K_E}$$